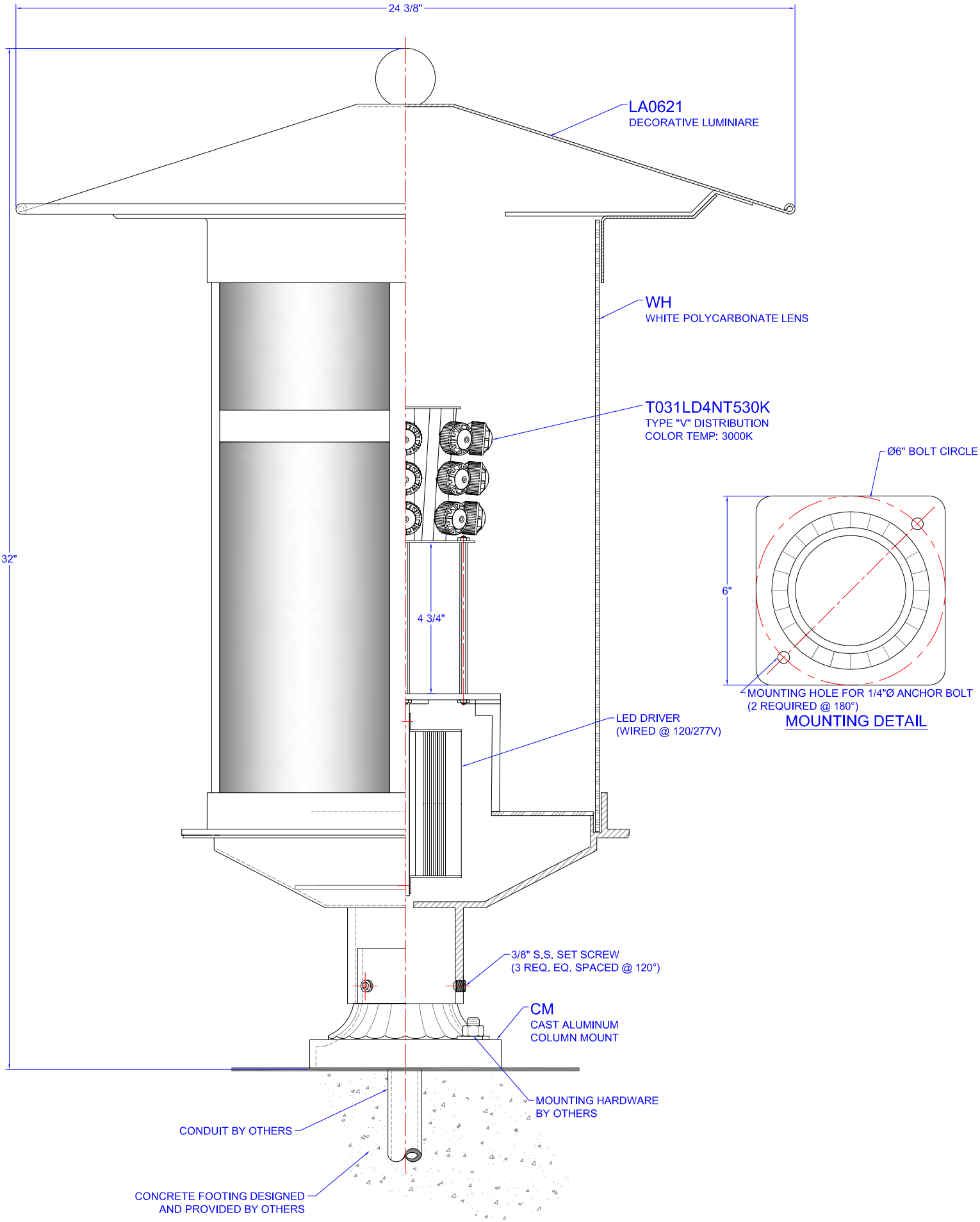
24 3/8"
32"
LA0621
DECORATIVE LUMINIARE
WH
WHITE POLYCARBONATE LENS
T031LD4NT530K
TYPE "V" DISTRIBUTION
COLOR TEMP: 3000K
4 3/4"
LED DRIVER
(WIRED @ 120/277V)
3/8" S.S. SET SCREW
(3 REQ. EQ. SPACED @ 120°)
CM
CAST ALUMINUM
COLUMN MOUNT
MOUNTING HARDWARE
BY OTHERS
CONDUIT BY OTHERS
CONCRETE FOOTING DESIGNED
AND PROVIDED BY OTHERS
Ø6" BOLT CIRCLE
6"
MOUNTING HOLE FOR 1/4"Ø ANCHOR BOLT
(2 REQUIRED @ 180°)
MOUNTING DETAIL