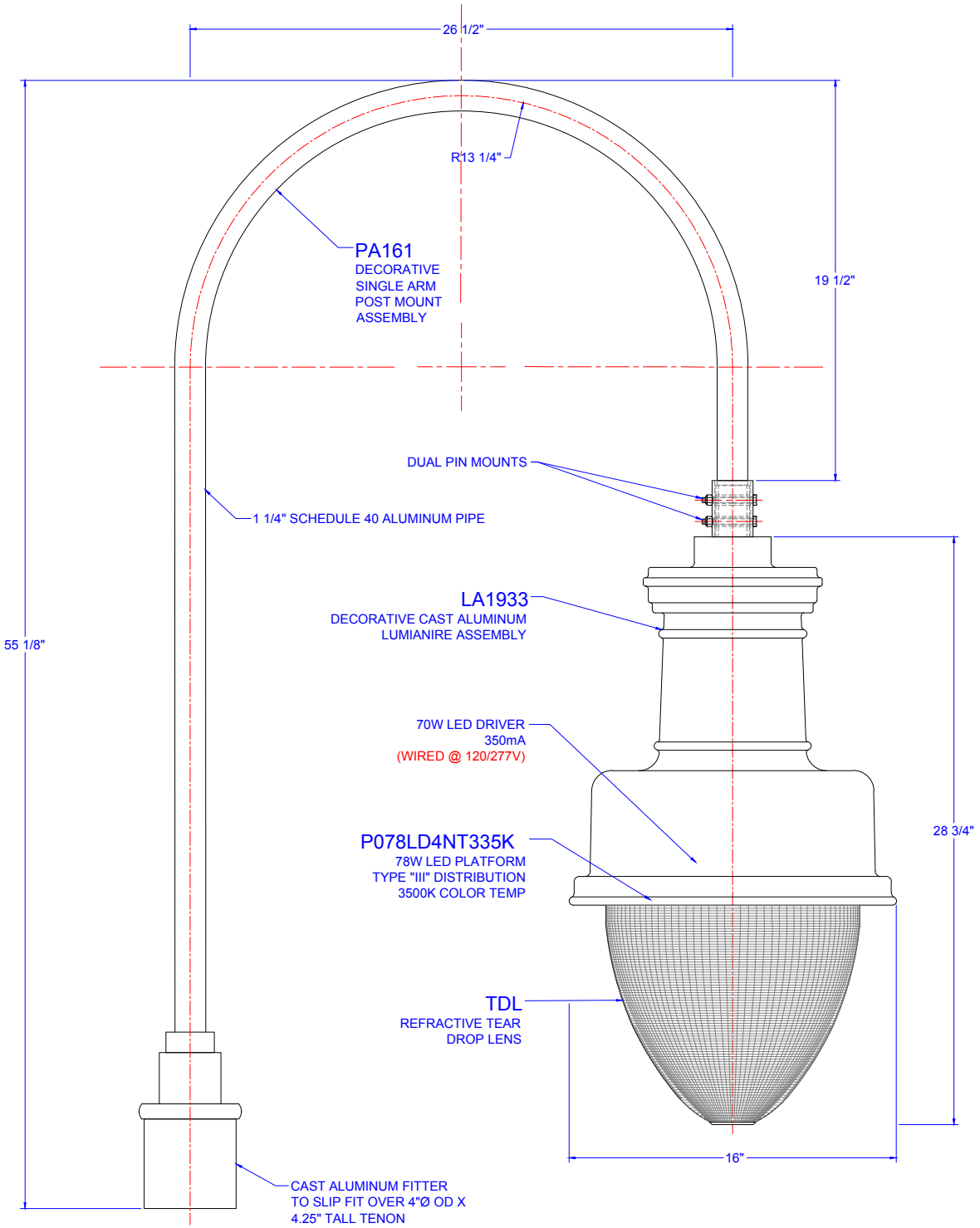
26 1/2"
R13 1/4"
PA161
DECORATIVE
SINGLE ARM
POST MOUNT
ASSEMBLY
19 1/2"
DUAL PIN MOUNTS
1 1/4" SCHEDULE 40 ALUMINUM PIPE
LA1933
DECORATIVE CAST ALUMINUM
LUMIANIRE ASSEMBLY
55 1/8"
70W LED DRIVER
350mA
(WIRED @ 120/277V)
28 3/4"
P078LD4NT335K
78W LED PLATFORM
TYPE "III" DISTRIBUTION
3500K COLOR TEMP
TDL
REFRACTIVE TEAR
DROP LENS
16"
CAST ALUMINUM FITTER
TO SLIP FIT OVER 4"Ø OD X
4.25" TALL TENON

*UL LISTED