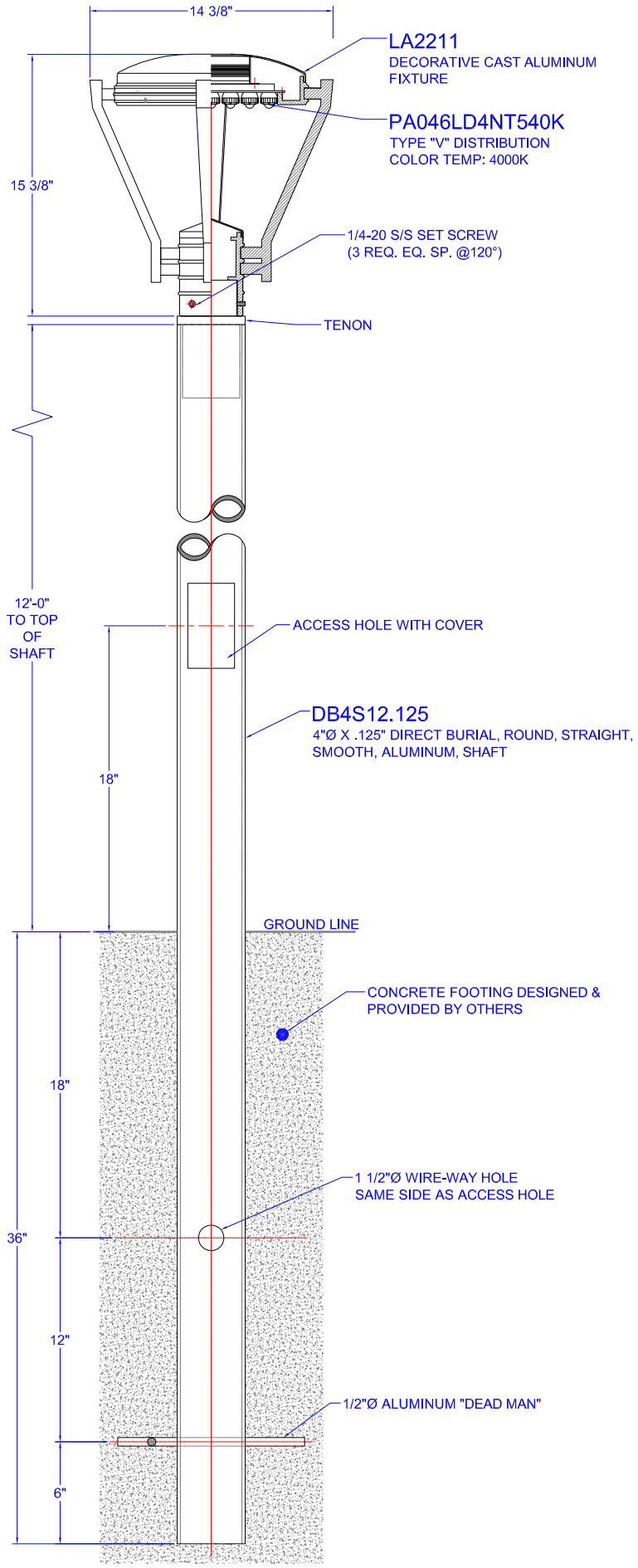

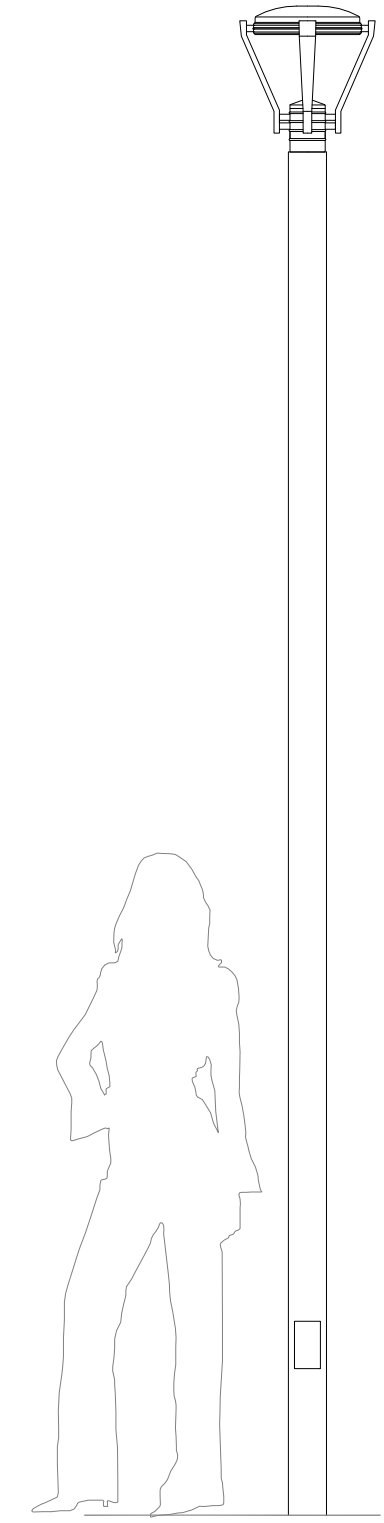

PROPORTIONAL VIEW

*UL LISTED