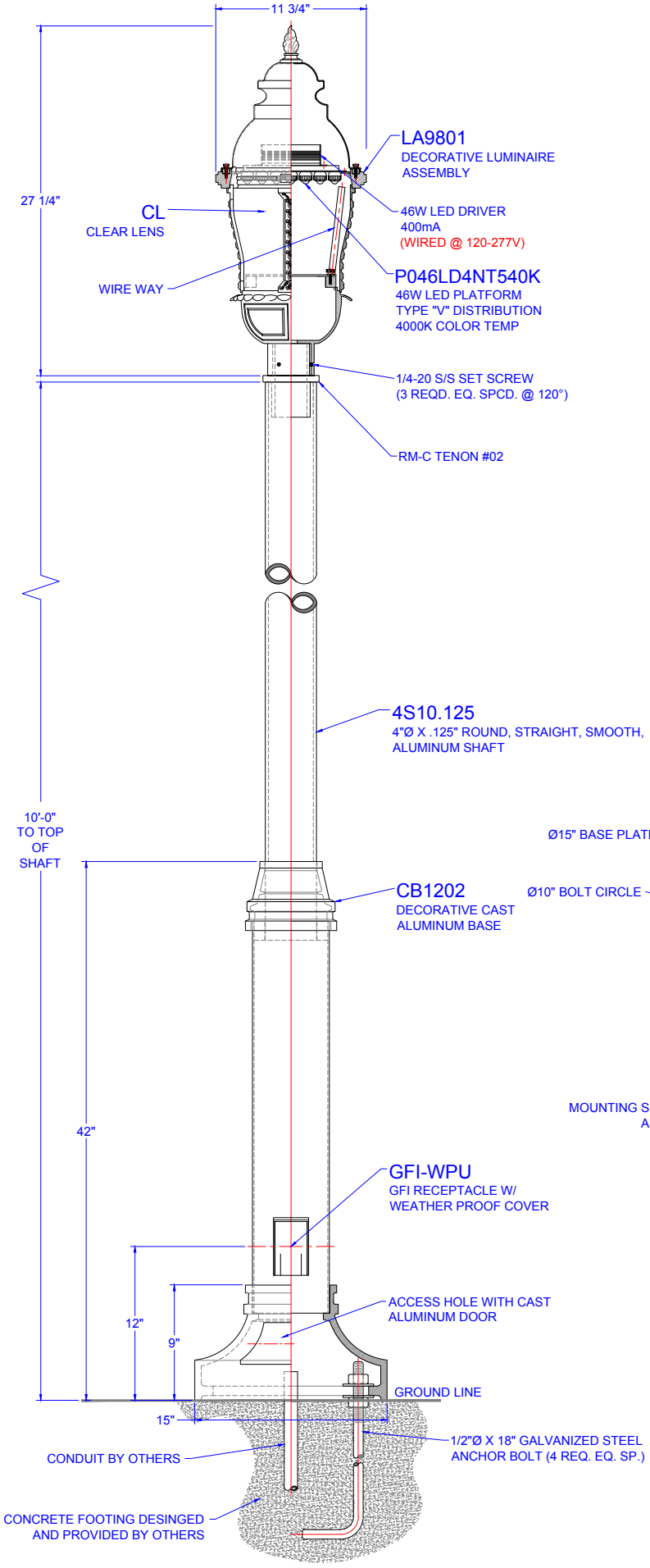

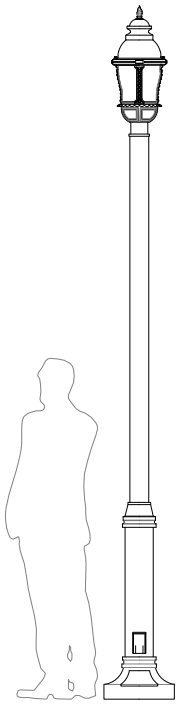

PROPORTIONAL VIEW

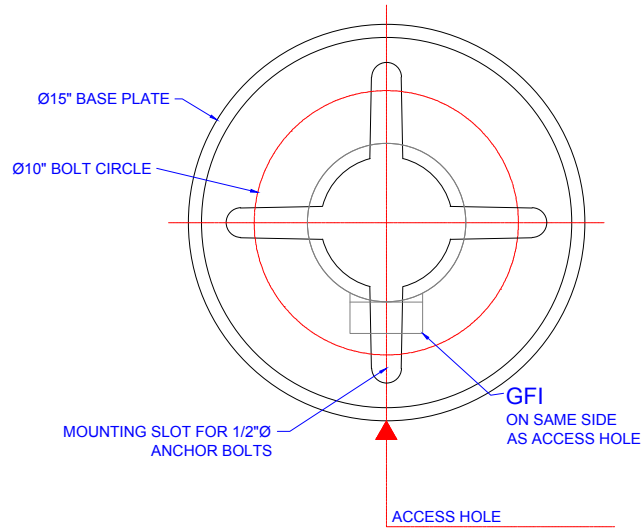

MOUNTING DETAIL

*UL LISTED