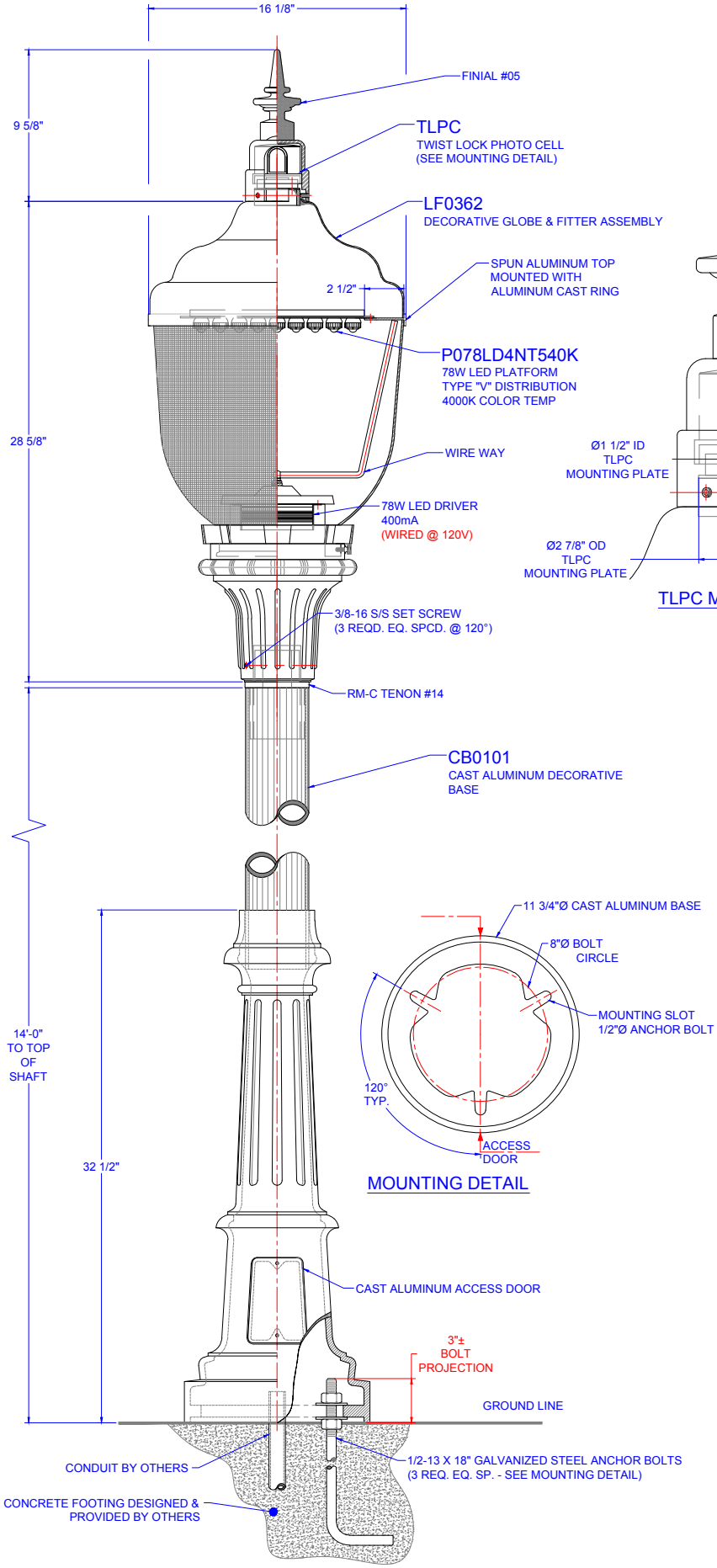

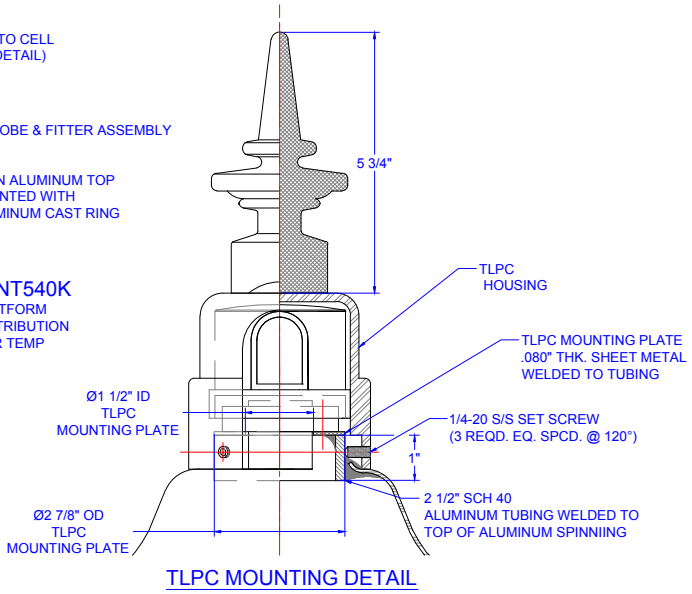

TLPC MOUNTING DETAIL

MOUNTING DETAIL

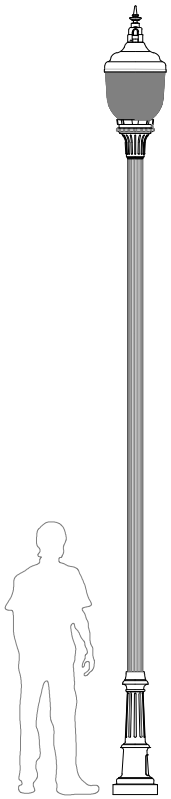

PROPORTIONAL VIEW

*UL LISTED